NOTE:
ICI6 is designed as "infinite baffle" for use without a back box in a standard ceiling joist.
If placing into an enclosed space the minimum back box volume is 20L (0.7ft3)

Square Grille

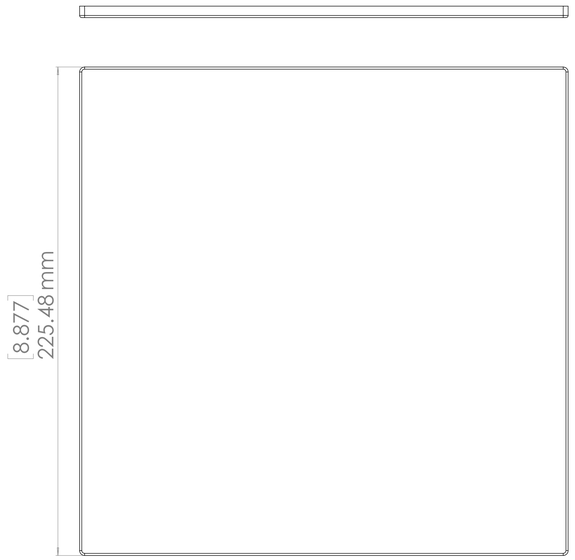

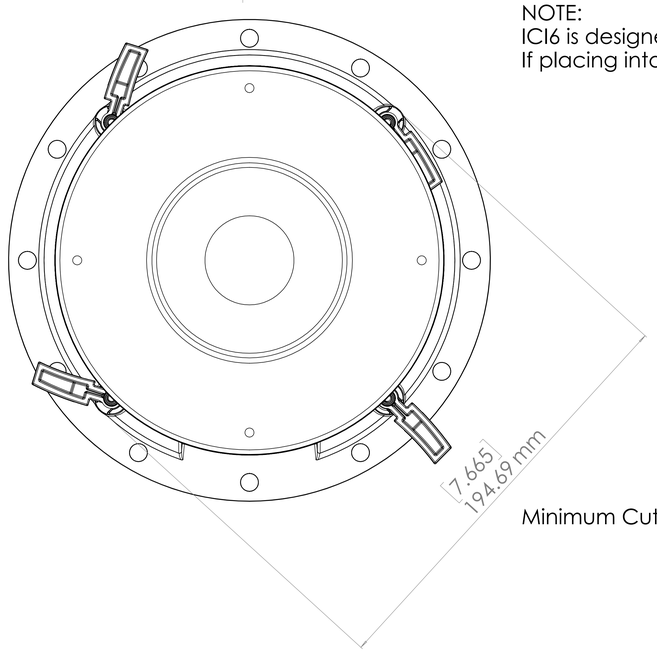

Minimum Cutout

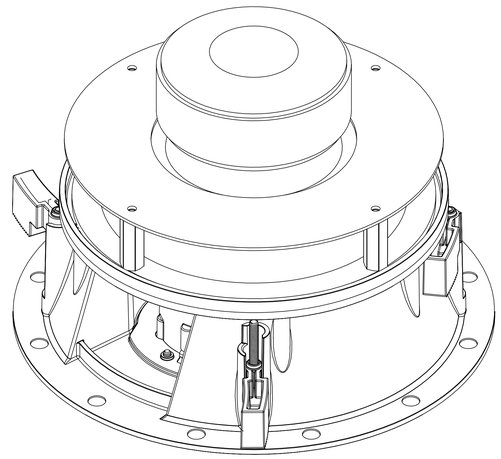

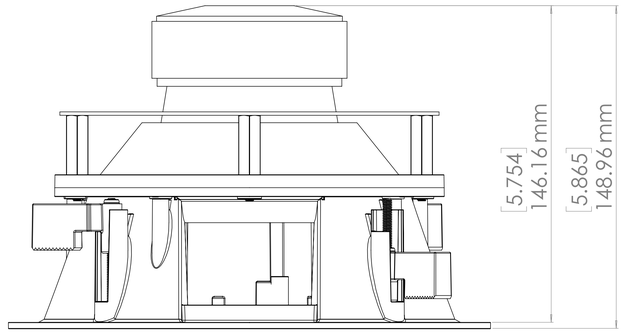

Mounting Depth and Total Depth

Rough-in Bracket and Cutout Diamter
(Mounting Wings Not Shown)

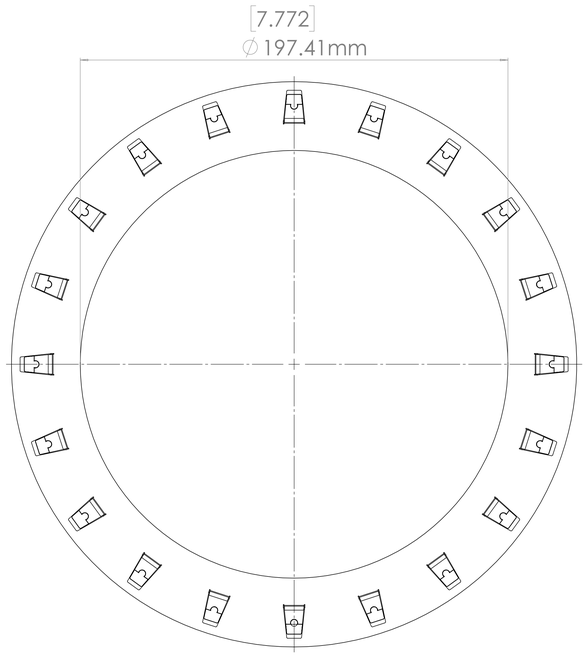

Round Grille

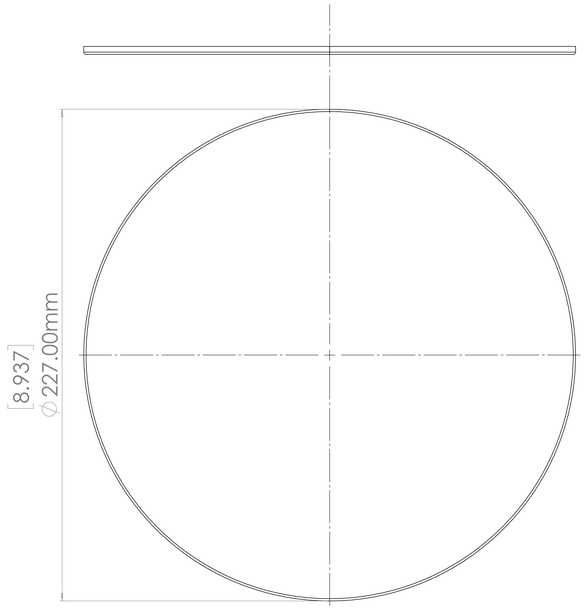

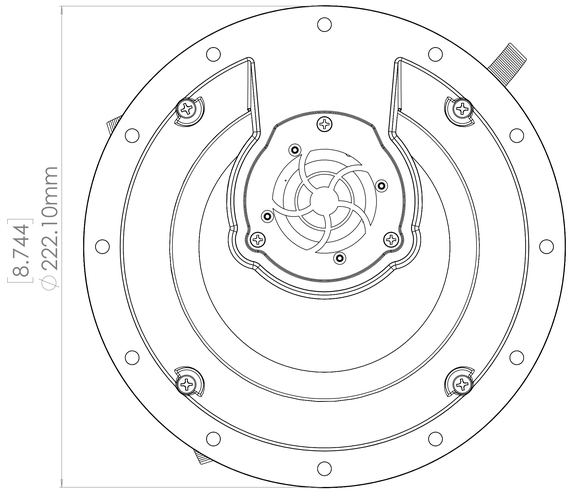

Frame Outside Diamter

DImensions are in [inches] and mm

UNLESS OTHERWISE SPECIFIED: DIMENSIONS ARE IN MILLIMETERS TOLERANCES: LINEAR: ANGULAR:	FINISH:		DEBURR AND BREAK SHARP EDGES	DO NOT SCALE DRAWING	REVISION
	NAME	SIGNATURE	DATE	TITLE:	
DRAWN					
CHK'D					
APPV'D					
MFG					
Q.A			MATERIAL:	DWG NO. ICI6	A0
			WEIGHT:	SCALE:1:1	SHEET 2 OF 2