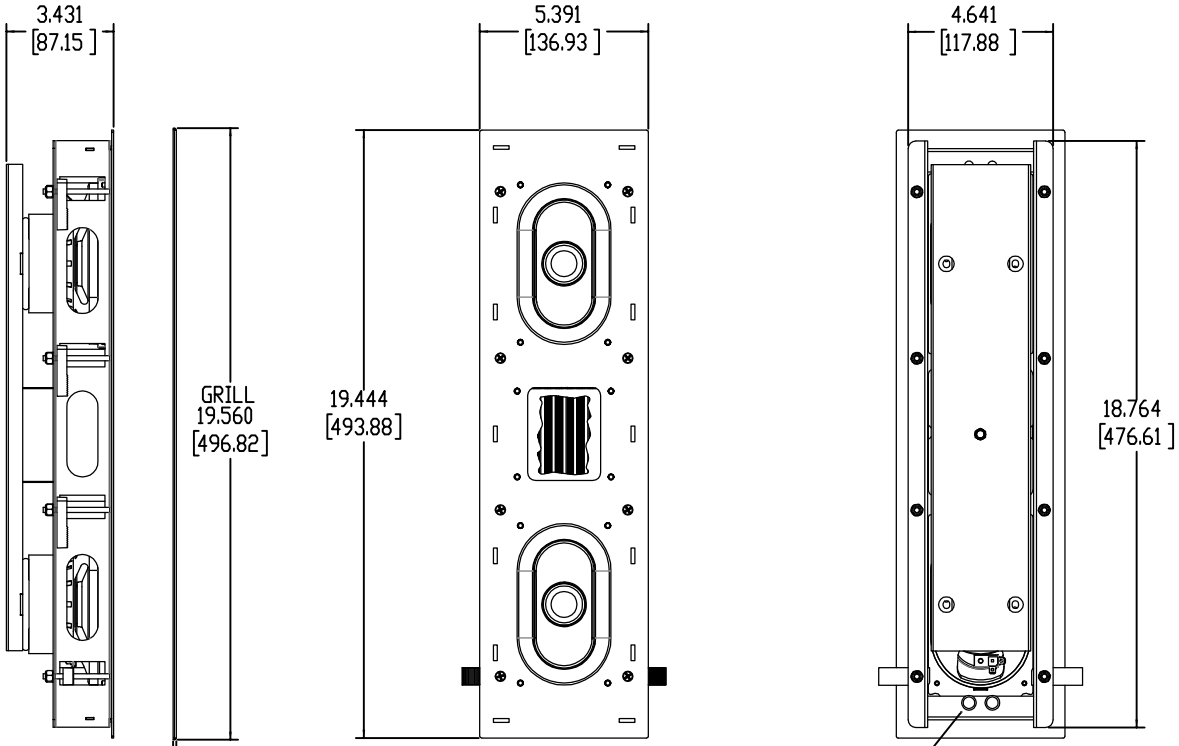

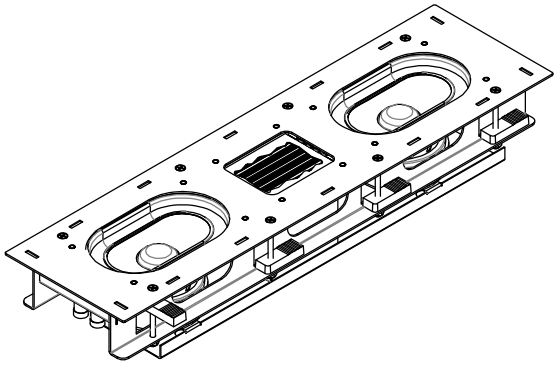

0.110
[2.79]
GRILL PROTRUSION
OFF WALL INSTALLED,
MAGNETIC ATTACHMENT

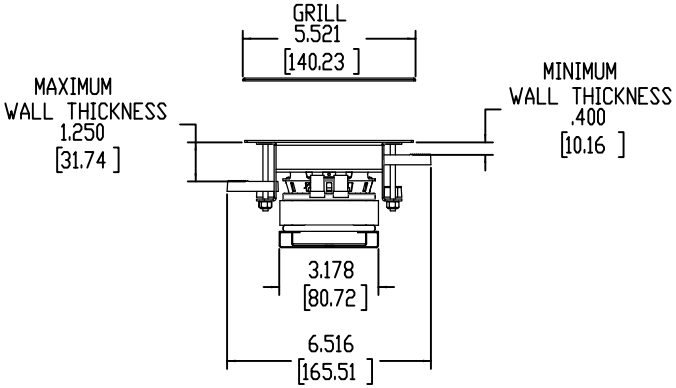

WALL CUTOUT DIMENSIONS
4.64" x 18.88" +/- 0.09"
[11.80cm x 47.96cm +/-.23cm]

RECOMMENDED VOLUME FOR P2i ENCLOSURE
CUBIC FEET - 0.65
LITERS - 18.41

MINIMUM VOLUME FOR P2i ENCLOSURE
CUBIC FEET - 0.36
LITERS - 10.16
ENCLOSURE VOLUMES LARGER THAN
RECOMMENDED CAN ALSO BE USED

DO NOT SCALE DRAWING

THIS IS CONFIDENTIAL AND PROPRIETARY INFORMATION THAT REMAINS THE SOLE PROPERTY OF WISDOM AUDIO. IT MAY NOT BE REPRODUCED IN ANY FORM, OR DISCLOSED WITHOUT THE PRIOR WRITTEN CONSENT OF OWNER.

Wisdom Audio
1572 College Parkway, Suite 164
Carson City, Nevada 89706

TITLE: SPEAKER INSIGHT P2i

SIZE	DWG NUMBER	REV.
D	940200/940210	A

SCALE: 1:2 SHEET: 1 OF 1